REMAINS LIGHTING COMPANY

WINSTON 18 CHANDELIER

ARCHIVE COLLECTION
From the Remains Archive. A five-arm solid brass chandelier with a large ball body, beaded cups and bobeches, and fine rope details throughout. Suspended from chain and decorative canopy. Our Archive Collection consists of the best examples of previous custom projects & historic fixtures from our collection. They are made available as inspiration for recreation or inclusion in custom projects.

DIMENSIONS
Minimum height: 22"
Overall: 18" diameter

APPLICATION
UL listed for use in dry environments

LAMPING
5 candelabra sockets
Also available with 5 Edison sockets
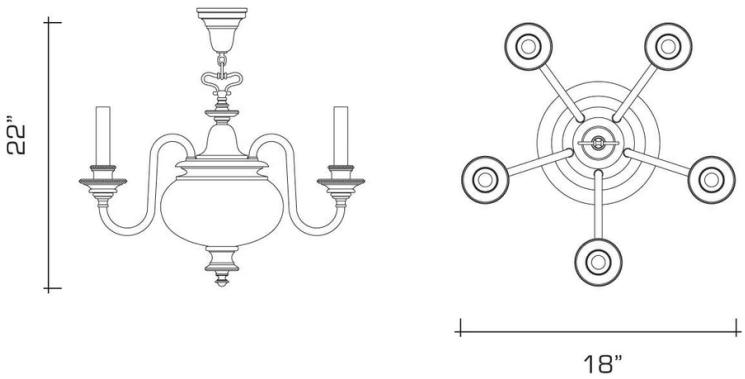
OPTIONS
Contact us to learn about pricing, lead time, and customization options.