REMAINS LIGHTING COMPANY

TRIPLE DOME CHANDELIER WITH SOLID SHADES

COMMUNE COLLECTION
A trio of sleek brass dome shades emerge from one central inverted bowl, each shade with a milk glass enclosed light source at the center of the shade. Commune's slash collection is inspired by Viennese Secession, French 1950's and Milanese modernist designs as seen through a California lens.

DIMENSIONS
Minimum height: 30-1/4"
Overall: 37-3/4" w. x 34-5/8" d.
Shade: 4-3/4" h. x 14-5/8" diameter
Canopy: 1-1/2" h. x 6" diameter
Glass: 6" diameter

APPLICATION
UL listed for use in dry environments

LAMPING
3 Edison sockets, maximum 75 watts per socket
3 Candelabra sockets, maximum 60 watts per socket
G16 Edison globe bulb recommended

OPTIONS
Custom heights and additional finishes available upon request.
Contact us to learn more about customization options.

AVAILABLE FINISHES
$8085 Polished Brass
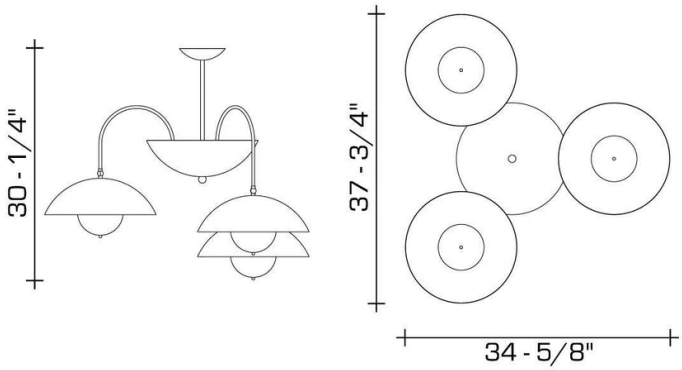
$8385 Dark Waxed Bronze, Polished Nickel