Scofield at REMAINS LIGHTING COMPANY

THOMASTON STATION EXTERIOR WALL LANTERN MEDIUM

SCOFIELD LIGHTING COLLECTION

A four sided copper wall lantern with mirrored curved roof and bottom details. This stately version of an 18th century French railroad station lantern offers a transitional style appropriate for both period and modern exteriors. Designed and manufactured by Scofield Lighting.

DIMENSIONS

Overall: 17-3/4" h. x 10" w. x 7" d.

APPLICATION

UL listed for use in dry, damp, or wet environments.

LAMPING

Single Edison socket, maximum 100 watts
Also available with 2 Candelabra sockets
B11 Edison torpedo bulb recommended

OPTIONS

Download our Finish Guide to view standard product options.
Candelabra cluster lamping available.
Alternate reflector options available.
Contact us to learn more about customization options.

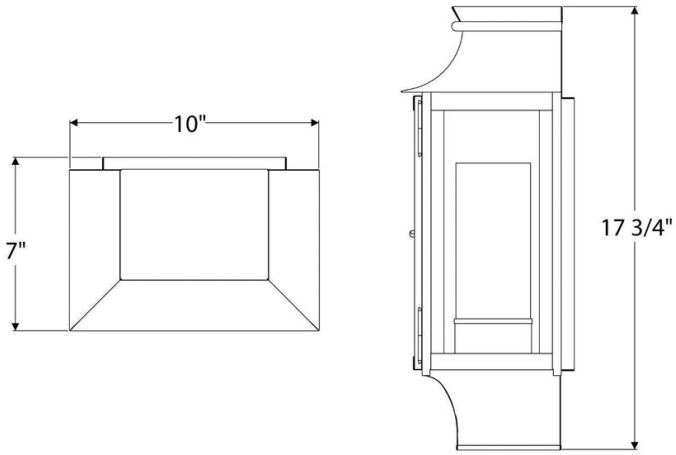

AVAILABLE FINISHES

$2145 Natural Copper

$2415 Black Lacquer, Bronze Lacquer, Bronzed Copper

$2615 Brushed Bronzed Copper, Oxidized Copper