Scofield at REMAINS LIGHTING COMPANY

THOMASTON STATION EXTERIOR HANGING LANTERN MEDIUM

SCOFIELD LIGHTING COLLECTION

A four sided copper lantern with mirrored curved roof and bottom details. This stately version of an 18th century French railroad station lantern offers a transitional style appropriate for both period and modern exteriors. Designed and manufactured by Scofield Lighting.

DIMENSIONS

Minimum height (with one link of chain): 23-1/4"
Minimum height (with hook): 27"
Overall: 10" w. x 10" d.
Height to loop: 19-3/4"
Canopy: 1" h. x 5" diameter

APPLICATION

UL listed for use in dry, damp, or wet environments.

LAMPING

Single Edison socket, maximum 100 watts
B11 Edison torpedo bulb recommended

OPTIONS

Download our Finish Guide to view standard product options.
Custom heights available.
Contact us to learn more about customization options.

AVAILABLE FINISHES

$2270 Natural Copper

$2570 Bronzed Copper
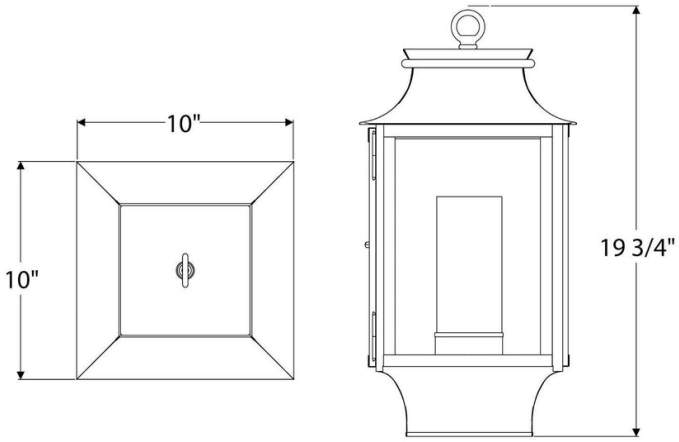
$2770 Oxidized Copper