REMAINS LIGHTING COMPANY

PHILIP HEXAGONAL LANTERN

REMAINS LIGHTING CO. COLLECTION
A six-sided solid bronze and glass hexagonal lantern with crisp cove-and-point details, its panels joined with the most sophisticated jewelry techniques possible. Inspired by an early 19th-century English mirror design.

DIMENSIONS
Minimum height: 26-7/8"
Overall: 16" diameter
Height to loop: 22-3/8"
Body: 19-7/8" h. x 16" diameter
Canopy: 1-7/8" h. x 5-1/2" w. x 4-3/4" d.

APPLICATION
UL listed for use in dry environments

LAMPING
3 Candelabra sockets, maximum 60 watts per socket
B10 Candelabra torpedo bulb recommended

OPTIONS
Custom heights available.
Contact us to learn more about customization options.

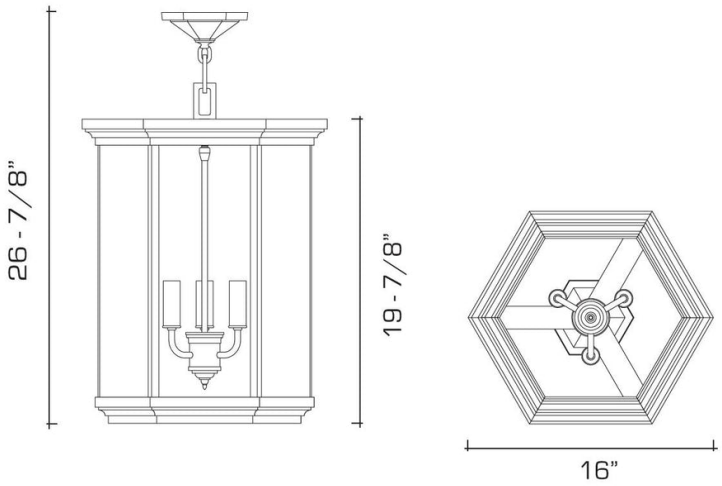

AVAILABLE FINISHES
$7810 Polished Brass

$8500 Burnished Brass, Burnished Nickel, Dark Waxed Bronze, Polished Nickel

$8735 Antique Brass, Dark Pewter, German Silver, Light Pewter, Oil Rubbed Bronze, Satin Nickel