REMAINS LIGHTING COMPANY

ORSON PENDANT

ARCHIVE COLLECTION
From the Remains Archive. This handsome domed pendant light is topped with a vented cap and crafted from hand polished, satined or burnished stainless steel with matching nickel-plated brass hanging hardware. Orson's milk glass lens casts a warm glow of light and is supported by a five point star finial, evoking American industrial and nautical light fixtures. Our Archive Collection consists of the best examples of previous custom projects & historic fixtures from our collection. They are made available as inspiration for recreation or inclusion in custom projects.

DIMENSIONS
Minimum height (flush mounted): 13-1/4"
Minimum height (with hangstraight): 14-1/2"
Minimum height (with one link of chain): 17-5/8"
Overall: 16" diameter
Height to loop: 13-3/4"

APPLICATION
UL listed for use in dry or damp environments.

LAMPING
2 Edison sockets
Also available with 2 GU24 sockets
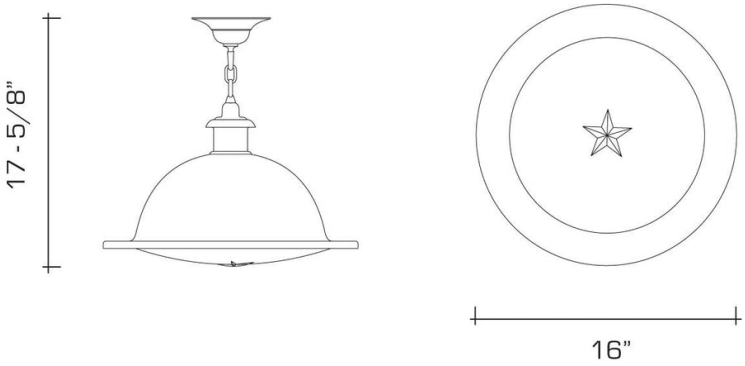
OPTIONS
Contact us to learn about pricing, lead time, and customization options.