Scofield at REMAINS LIGHTING COMPANY

NEW ENGLAND BARN EXTERIOR POST LANTERN LARGE

SCOFIELD LIGHTING COLLECTION

A four sided exterior copper post lantern with curved top inspired by Richard Scofield's reproductions of museum pieces drawn from 18th century New England to be mounted on an existing post. Pier mounts are also available. Designed and manufactured by Scofield Lighting.

DIMENSIONS

Overall: 30" h. x 12-1/2" w. x 12-1/2" d.

APPLICATION

UL listed for use in dry, damp, or wet environments.

LAMPING

Single Edison socket, maximum 100 watts
Also available with 3 Candelabra sockets
B11 Edison torpedo bulb recommended

OPTIONS

Download our Finish Guide to view standard product options.
Candelabra cluster lamping available.
Contact us to learn more about customization options.

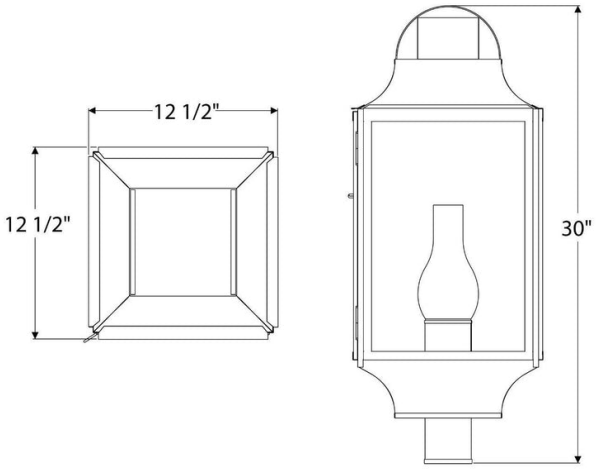

AVAILABLE FINISHES

$2295 Natural Copper

$2370 Black Lacquer, Bronze Lacquer, Bronzed Copper

$2545 Brushed Bronzed Copper, Oxidized Copper