REMAINS LIGHTING COMPANY

MERCER 26 LANTERN

REMAINS LIGHTING CO. COLLECTION
A tapered four sided solid brass and glass hanging lantern with arch detailed panels and clean expressed joinery. Inspired by stable windows seen in the Pennsylvania countryside.

DIMENSIONS
Minimum height (with one link of chain): 34-3/4"
Body: 26-1/4" h. x 18-1/4" w. x 18-1/4" d.
Canopy: 1-1/2" h. x 6" diameter

APPLICATION
UL listed for use in dry environments

LAMPING
4 Candelabra sockets, maximum 60 watts per socket
Also available with 4 Edison or GU24 sockets
B10 Candelabra torpedo bulb recommended

OPTIONS
Custom heights available.
Contact us to learn more about customization options.

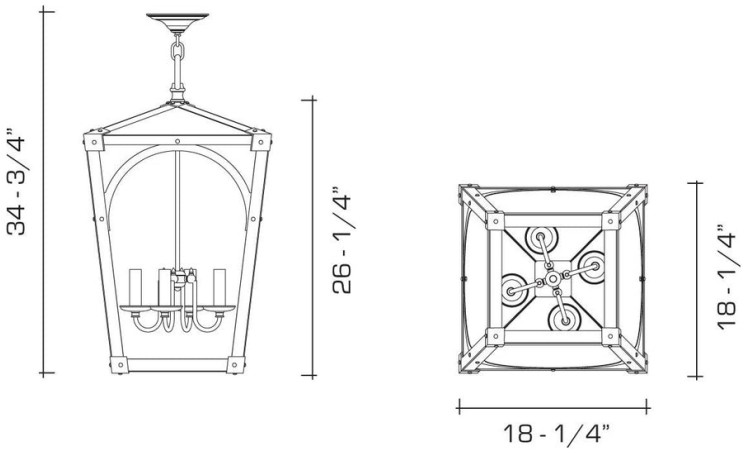

AVAILABLE FINISHES
$9620 Polished Brass

$10280 Burnished Brass, Burnished Nickel, Dark Waxed Bronze, Polished Nickel

$10670 Antique Brass, Dark Pewter, Light Pewter, Oil Rubbed Bronze, Satin Nickel

$9620 Verdigris