REMAINS LIGHTING COMPANY

MERCER 17 EXTERIOR WALL LANTERN

REMAINS LIGHTING CO. COLLECTION
A tapered four-sided solid brass and glass wall mounted lantern with arch-detailed panels and clean expressed joinery. Inspired by stable windows seen in the Pennsylvania countryside.

DIMENSIONS
Overall: 22-1/2" h. x 11-1/2" w. x 16" d.
Backplate: 12" h. x 4-1/2" w.
Body: 17-1/2" h. x 11-1/2" diameter

APPLICATION
UL listed for use in dry, damp, or wet environments.

LAMPING
4 candelabra sockets, maximum 60 watts per socket
Also available with single Edison or GU24 socket (frosted glass recommended)
B10 Candelabra torpedo bulb recommended

JUNCTION BOX
2" x 3" vertical junction box recommended

OPTIONS
Optional bottom door also available.
Contact us to learn more about customization options.

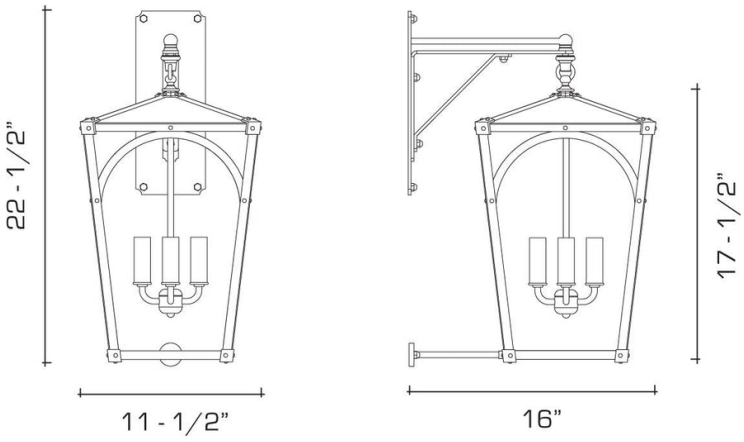

AVAILABLE FINISHES
$6835 Polished Brass

$7360 Burnished Brass, Burnished Nickel, Dark Waxed Bronze, Polished Nickel

$7745 Antique Brass, Dark Pewter, Light Pewter, Oil Rubbed Bronze, Satin Nickel, Verdigris