REMAINS LIGHTING COMPANY

MARION TWIN SCONCE

REMAINS LIGHTING CO. COLLECTION
A solid brass double-light sconce with concentrically stepped round backplate. The backplate's central convex boss joins seamlessly to the urn shaped armback.

DIMENSIONS
Overall: 10-1/4" h. x 10-1/2" w. x 5-1/2" d.
Backplate: 4-1/2" diameter

APPLICATION
UL listed for use in dry environments

LAMPING
2 candelabra sockets, maximum 60 watts per socket
Also available with 2 Edison or GU24 sockets
B10 Candelabra torpedo bulb recommended

JUNCTION BOX
2" x 3" vertical junction box recommended

OPTIONS
Contact us to learn more about customization options.

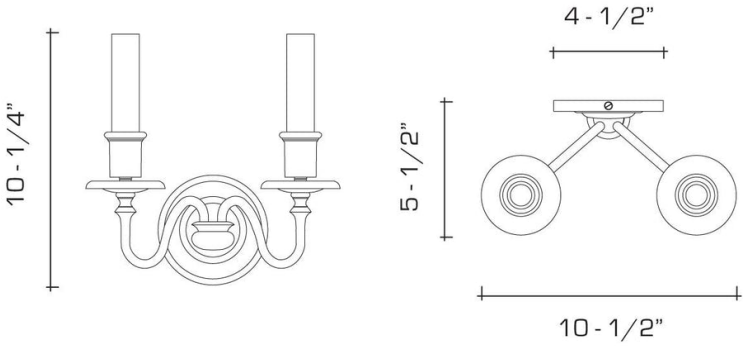

AVAILABLE FINISHES
$1540 Polished Brass

$1810 Burnished Brass, Burnished Nickel, Dark Waxed Bronze, Polished Nickel

$2020 Antique Brass, Dark Pewter, German Silver, Light Pewter, Oil Rubbed Bronze, Satin Nickel