REMAINS LIGHTING COMPANY

CALAIS CARRIAGE LANTERN

ARCHIVE COLLECTION
From the Remains Archive. This four-sided solid brass exterior wall lantern with tapered top and bottom has precisely cut screens of fleur-de-lis and quatrefoil motifs protecting the clear glazing. Conceived and drawn by Designer Tracey Topping. Our Archive Collection consists of the best examples of previous custom projects & historic fixtures from our collection. They are made available as inspiration for recreation or inclusion in custom projects.

DIMENSIONS
Overall: 26-1/4" h. x 14" w. x 11-1/8" d.
Backplate: 24-5/8" h. x 4" w.

APPLICATION
UL listed for use in dry, damp, or wet environments.

LAMPING
Single Edison socket
Also available with single GU24 socket (frosted glass recommended)

OPTIONS
Contact us to learn about pricing, lead time, and customization options.

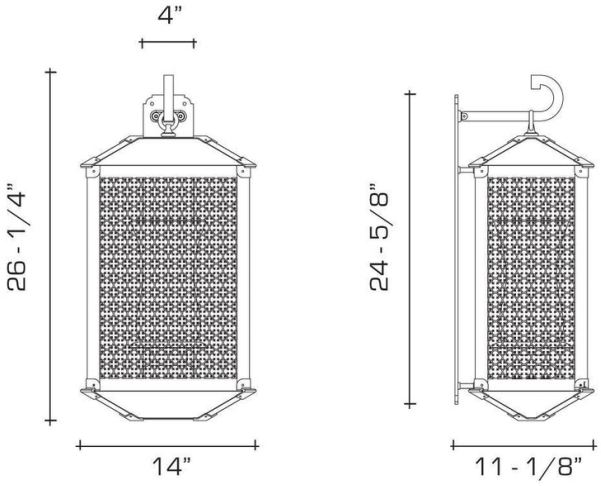

AVAILABLE FINISHES
Polished Brass