Scofield at REMAINS LIGHTING COMPANY

BOSTON EXTERIOR POST LANTERN SMALL

SCOFIELD LIGHTING COLLECTION

This copper four-sided tapered post lantern with eight panels of glass and conical finial cap is inspired by Boston street lighting typical to late 18th - early 19th century. Designed and manufactured by Scofield Lighting.

DIMENSIONS

Overall: 32" h. x 12" w. x 12" d.

APPLICATION

UL listed for use in dry, damp, or wet environments.

LAMPING

Single Edison socket, maximum 100 watts
Also available with single Candelabra socket
B11 Edison bulb recommended

OPTIONS

Download our Finish Guide to view standard product options.
Contact us to learn more about customization options.

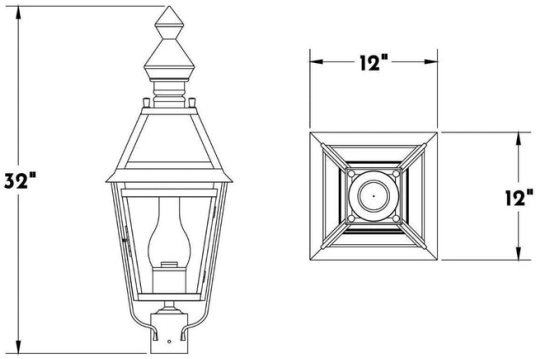

AVAILABLE FINISHES

$2805 Natural Copper

$2965 Black Lacquer, Bronze Lacquer, Bronzed Copper

$3130 Brushed Bronzed Copper, Oxidized Copper