Scofield at REMAINS LIGHTING COMPANY

THREE CORNERED EXTERIOR WALL LANTERN

SCOFIELD LIGHTING COLLECTION

A three sided glass and copper wall lantern, inspired by an example found in Massachusetts, circa 1830s. Designed and manufactured by Scofield Lighting.

DIMENSIONS

Overall: 14" h. x 8-1/2" w. x 8-1/2" d.

APPLICATION

UL listed for use in dry, damp, or wet environments.

LAMPING

Single Edison socket, maximum 100 watts
Also available with single Candelabra socket
B11 Edison torpedo bulb recommended

JUNCTION BOX

2" x 3" Vertical junction box

OPTIONS

Download our Finish Guide to view standard product options.
Contact us to learn more about customization options.

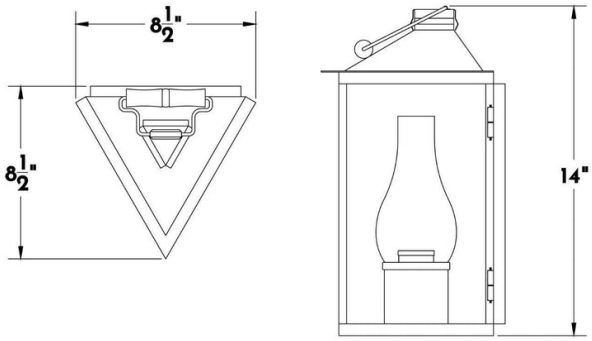

AVAILABLE FINISHES

$2045 Natural Copper

$2220 Black Lacquer, Bronze Lacquer, Bronzed Copper

$2370 Brushed Bronzed Copper, Oxidized Copper