Scofield at REMAINS LIGHTING COMPANY

PHILADELPHIA EXTERIOR WALL LANTERN MEDIUM

SCOFIELD LIGHTING COLLECTION

An eight sided tapered copper and glass wall lantern with decorative chimney. Ben Franklin's early experience in his father's soap and candle shop led to his invention of a two wick tube that greatly increased the power of lantern light in 1751. Based on street lanterns that lit Philadelphia. Late 18th - early 19th century. Designed and manufactured by Scofield Lighting.

DIMENSIONS

Overall: 24" h. x 14" w. x 18" d.

APPLICATION

UL listed for use in dry, damp, or wet environments.

LAMPING

Single Edison socket, maximum 100 watts
Also available with 3 Candelabra sockets
B11 Edison torpedo bulb recommended

JUNCTION BOX

2" x 3" Vertical junction box

OPTIONS

Download our Finish Guide to view standard product options.
Candelabra cluster lamping available.
Contact us to learn more about customization options.

AVAILABLE FINISHES

$2750 Natural Copper

$2945 Black Lacquer, Bronze Lacquer, Bronzed Copper
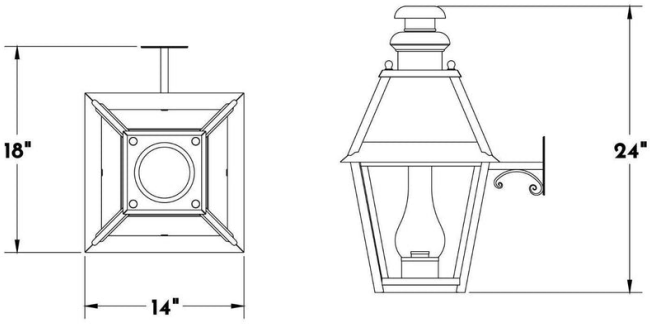
$3135 Brushed Bronzed Copper, Oxidized Copper