REMAINS LIGHTING COMPANY

MONTGOMERY SCONCE

REMAINS LIGHTING CO. COLLECTION
A single-light solid brass sconce with crisp square backplate and rectangular arm. Montgomery is simple, clean, and sharply tailored. There's an undeniable and magical thread to the sunken SS Richard Montgomery, an American Liberty cargo ship, the masts still visible off the shore of the Thames Estuary.

DIMENSIONS
Overall: 10-1/8" h. x 4-7/8" w. x 5-1/8" d.
Backplate: 4-7/8" h. x 4-7/8" w.

APPLICATION
UL listed for use in dry environments

LAMPING
Single Candelabra socket, maximum 60 watts
B10 Candelabra torpedo bulb recommended

JUNCTION BOX
2" x 3" Vertical junction box recommended

OPTIONS
Contact us to learn more about customization options.

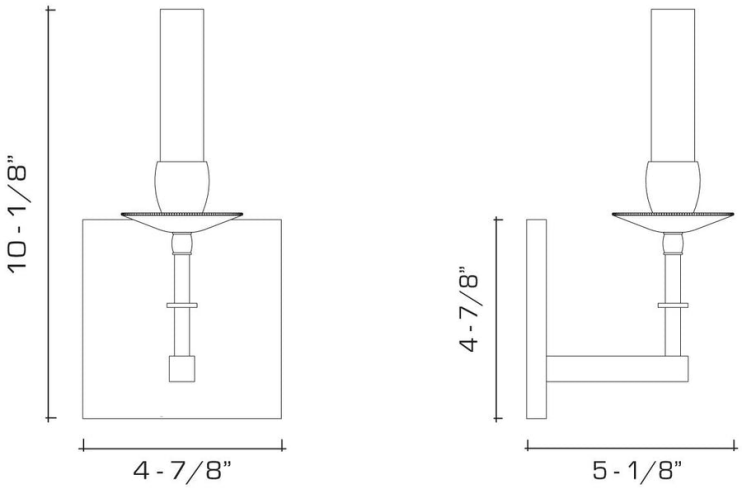

AVAILABLE FINISHES
$1610 Polished Brass

$1735 Burnished Brass, Burnished Nickel, Dark Waxed Bronze, Polished Nickel

$1850 Antique Brass, Dark Pewter, German Silver, Light Pewter, Oil Rubbed Bronze, Satin Nickel