# REMAINS LIGHTING COMPANY

## LOIRE TWIN SCONCE

### REMAINS LIGHTING CO. COLLECTION
A double-light solid brass sconce with slender arms that flare gradually as they rise off a coved backplate, giving the sense of lift and elevation.

### DIMENSIONS
Overall: 15-3/4" h. x 6-1/8" w. x 4" d.
Backplate: 5" h. x 5" w.

### APPLICATION
UL listed for use in dry environments

### LAMPING
2 Candelabra sockets, maximum 60 watts per socket
B10 Candelabra torpedo bulb recommended

### JUNCTION BOX
2" x 3" Vertical junction box recommended

### OPTIONS
Contact us to learn more about customization options.

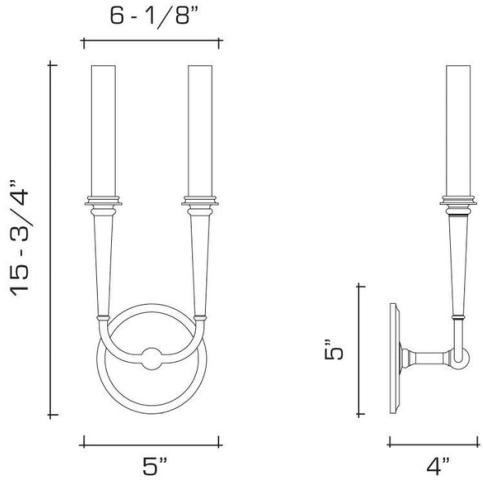


### AVAILABLE FINISHES
$1855 Polished Brass

$2005 Burnished Brass, Burnished Nickel, Dark Waxed Bronze, Polished Nickel

$2150 Antique Brass, Dark Pewter, German Silver, Light Pewter, Oil Rubbed Bronze, Satin Nickel

@2024 REMAINS LIGHTING CO. NEW YORK CHICAGO LOS ANGELES REMAINS.COM