Scofield at REMAINS LIGHTING COMPANY

FEDERAL CHANDELIER

SCOFIELD LIGHTING COLLECTION

Eight arms extend from a central tin body, with twisted ribbon-form connections to a leaf decorated collar. This chandelier is a reproduction of a fixture purchased at Sotheby's auction. Inspired by the graceful proportions and elegant simplicity popular during the Federal period. Late 1700's - early 1800's. Designed and manufactured by Scofield Lighting.

DIMENSIONS

Minimum height (with one link of chain): 20-1/2"
Minimum height (with hook): 24-1/4"
Overall: 25-1/4" diameter
Height to loop: 17-1/4"
Canopy: 1" h. x 5" diameter

APPLICATION

UL listed for use in dry or damp environments.

LAMPING

8 Candelabra sockets
B10 Candelabra torpedo bulb recommended

OPTIONS

Download our Finish Guide to view standard product options.
Custom heights available.
Contact us to learn more about customization options.

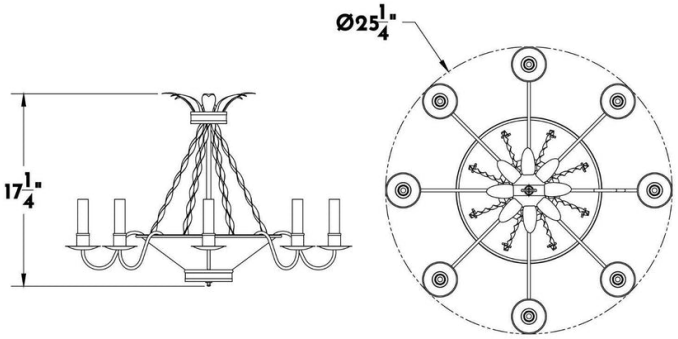

AVAILABLE FINISHES

$4565 Aged Tin and Barn Red, Aged Tin and Federal Blue, Aged Tin and Lexington Green, Aged Tin and Mustard, Aged Tin and Pitch Black, Aged Tin and Sea Green, Aged Tin and Snow White, Aged Tin and Soldier Blue, Aged Tin and Tavern Green