Scofield at REMAINS LIGHTING COMPANY

ENGLISH GAS EXTERIOR POST LANTERN LARGE

SCOFIELD LIGHTING COLLECTION

A six-sided tapered copper post lantern with stepped domed top. Inspired by a hanging lantern found in Birmingham, England, early 19th century. Gas lighting was originally developed in London in the late 18th century, and quickly spread to American cities, arriving first in Baltimore in 1816 introduced initially to private residences by a Philadelphia coppersmith. Designed and manufactured by Scofield Lighting.

DIMENSIONS

Overall: 29-3/4" h. x 19" w. x 16-1/2" d.

APPLICATION

UL listed for use in dry, damp, or wet environments.

LAMPING

Single Edison socket, maximum 100 watts
Also available with 3 Candelabra sockets
B11 Edison torpedo bulb recommended

OPTIONS

Download our Finish Guide to view standard product options.
Candelabra cluster lamping available.
Contact us to learn more about customization options.

AVAILABLE FINISHES

$4975 Natural Copper

$5200 Black Lacquer, Bronze Lacquer, Bronzed Copper
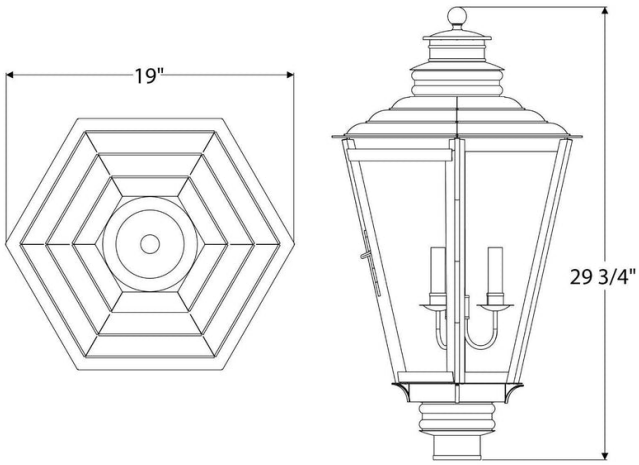
$5415 Brushed Bronzed Copper, Oxidized Copper