Scofield at REMAINS LIGHTING COMPANY

ENGLISH GAS EXTERIOR HANGING LANTERN MEDIUM

SCOFIELD LIGHTING COLLECTION

A six-sided tapered copper hanging lantern with stepped domed top. Inspired by a hanging lantern found in Birmingham, England, early 19th century. Designed and manufactured by Scofield Lighting.

DIMENSIONS

Minimum height (with one link of chain): 29-1/4"
Minimum height (with hook): 33"
Overall: 17" diameter
Height to loop: 26"
Canopy: 1" h. x 5" diameter

APPLICATION

UL listed for use in dry, damp, or wet environments.

LAMPING

3 Candelabra sockets, maximum 60 watts per socket
B10 Candelabra torpedo bulb recommended

OPTIONS

Download our Finish Guide to view standard product options.
LED bulbs (maximum 6 watts) recommended with optional wax sleeves.
Contact us to learn more about customization options.

AVAILABLE FINISHES

$4930 Natural Copper

$5135 Black Lacquer, Bronze Lacquer, Bronzed Copper
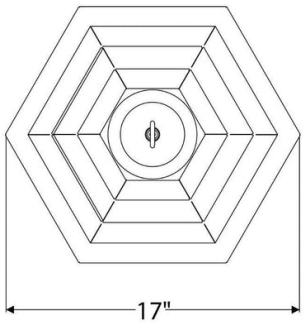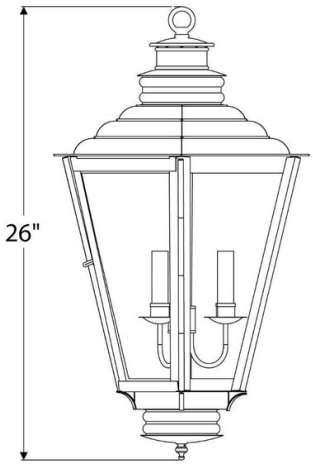
$5340 Brushed Bronzed Copper, Oxidized Copper