Scofield at REMAINS LIGHTING COMPANY

ENGLISH BOX WALL LANTERN

SCOFIELD LIGHTING COLLECTION

A boxed tin and glass wall sconce with mirrored back and gilded shell motif. With a hinged door for re-lamping. Originally made in England, found in Virginia, circa 1750. Designed and manufactured by Scofield Lighting.

DIMENSIONS

Overall: 20" h. x 8-1/4" w. x 5-1/4" d.

APPLICATION

UL listed for use in dry environments

LAMPING

2 Candelabra sockets, maximum 60 watts per socket
B10 Candelabra torpedo bulb recommended

JUNCTION BOX

2" x 3" Vertical junction box

OPTIONS

Download our Finish Guide to view standard product options.
LED bulb (maximum 6 watts) recommended with optional wax sleeves.
Contact us to learn more about customization options.

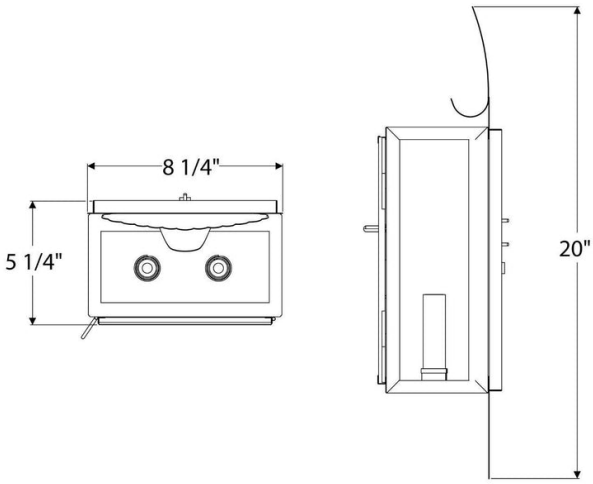

AVAILABLE FINISHES

$1945 Aged Tin