Scofield at REMAINS LIGHTING COMPANY

EDISON STYLE PENDANT SMALL

SCOFIELD LIGHTING COLLECTION

This classic conical shade pendant takes inspiration from the original Victorian Edison type fixture of 1880. With the introduction of the first light bulb in 1879, the world's fascination with the source of light took on new heights. Aged tin finish provided with off white painted interior. Designed and manufactured by Scofield Lighting.

DIMENSIONS

Minimum height (with one link of chain): 14"
Minimum height (with hook): 16-1/2"
Overall: 12" diameter
Height to loop: 9-1/2"
Canopy: 1" h. x 5" diameter

APPLICATION

UL listed for use in dry or damp environments.

LAMPING

Single Edison socket, maximum 100 watts
A15 Edison bulb recommended

OPTIONS

Download our Finish Guide to view standard product options.
Custom heights available.
Contact us to learn more about customization options.

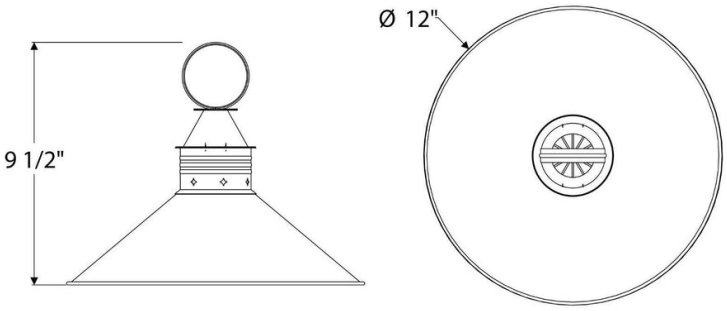

AVAILABLE FINISHES

$1420 Aged Tin

$1335 Natural Copper

$1475 Black Lacquer, Bronze Lacquer, Bronzed Copper

$1535 Brushed Bronzed Copper, Oxidized Copper