REMAINS LIGHTING COMPANY

DOME TORCHIERE

ARCHIVE COLLECTION

From the Remains Archive. A sleek dome floor lamp with upturned brass shade and Commune's signature "slash" pierced rim. The Commune Design slash collection is inspired by Viennese Secession, French 1950's and Milanese modernist designs as seen through a California lens. Our Archive Collection consists of the best examples of previous custom projects & historic fixtures from our collection. They are made available as inspiration for recreation or inclusion in custom projects.

DIMENSIONS

Overall: 75" h.
Shade: 14-5/8" diameter
Base: 11-3/4" diameter
Glass: 6" diameter

LAMPING

Single Edison socket, maximum 75 watts

OPTIONS

Contact us to learn about pricing, lead time, and customization options.

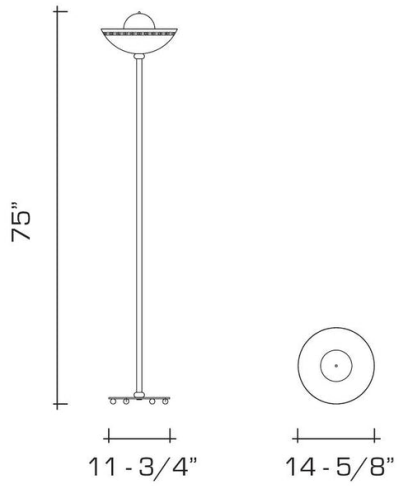

AVAILABLE FINISHES

Polished Brass

Dark Waxed Bronze, Polished Nickel